RoHS Compliant

REV.	ECN NO	LTR	DESCRIPTION	REVISER	DATE
A/6		6	修改图面	WB	2020.07.31
A/7	20210929001	7	焊点数量由6个增加到12个，增加内壳与外壳之间的强度。	WB	2021.08.20
A/8		8	新增机种DIP=2.54mm	WB	2022.12.15

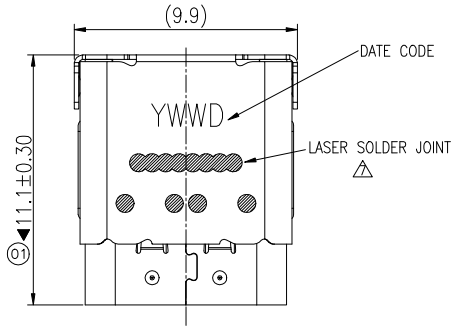

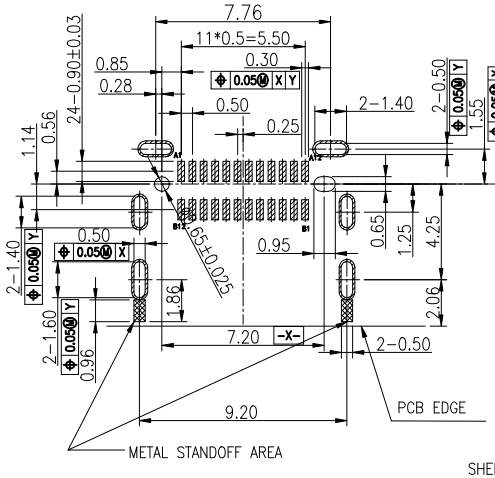

RECOMMENDED P.C.B LAYOUT(COMPONENT SIDE)

TOLERANCE:±0.05
PAD RING WIDTH:0.10MM

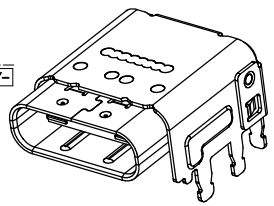

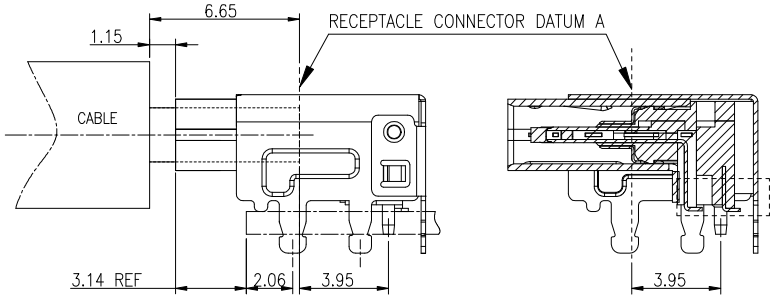

7. PART NUMBER INFORMATION

319CFK-XX-X-SNHF

SHELL TAB(DIM L)
C6: L=1.85 (PCB T=1.00MM)
7 C7: L=3.60 (PCB T=3.00MM)
8 J9: L=2.54 (PCB T=2.0MM)

接触区域Terminal plating:
1: Gold flash
6: Gold Au 30u"

NOTE:
1.MATERIAL:
1.1 HOUSING: LCP E130i UL94V-0, COLOR: BLACK
1.2 TERMINAL:HIGHE CONDUCTIVE COPPER C18400 T=0.15MM
1.3 SHELL: STAINLESS STEEL SUS304 T=0.30MM
1.4 OUTER SHIELD: STAINLESS STEEL SUS304 T=0.20MM
1.5 LATCH: STAINLESS STEEL SUS304 T=0.15MM
1.6 EMI_SPRING: STAINLESS STEEL SUS304 T=0.10MM
2. PLATING:
2.1 CONTACT: SELECTIVE GOLD PLATED ON CONTACT AREA
6 GOLD FLASH PLATED OR 100u" Min MATTE TIN PLATED ON SOLDER TAIL 50U" Min. NICKEL UNDER-PLATED
2.2 SHELL:50U" Min. NICKEL PLATED OVERALL
2.3 OUTER SHIELD: NICKEL PLATING 50U" MINIMUM OVERALL
2.4 LATCH AND EMI SPRING: CLEAN
3. CHARACTERISTICS:
3.1 ELECTRICAL CHARACTERISTICS;
CONTACTRESISTANCE:40mΩ MAXIMUM
CONTACT CURRENT RATING:5A Max FOR VBUS;1.25A FOR OTHER PIN
DIELECTRIC WITHSTANDING VOLTAGE:100 V R.M.S.
INSULATION RESISTANCE 100 MEGOHMS MIN
OPERATING TEMPEROTURE:-40°C ~ +80°C
3.2 MECHANICAL:
MATING FORCE: 5~20N
UNMATING FORCE: 8~20N.AFTER DURABILITY: 6~20N
4. THIS PRODUCT IS FOR REFLOW SOLDERING ONLY
5. THIS PRODUCT DOESN'T CONTAIN ENVIRONMENTAL HAZARDOUS PER DIRECTIVE 2011/65/EU FOR RoHS COMPLIANT.
6. PRODUCT SPECIFICATION REFER TO : USB C TYPE SPEC REV 1.2.

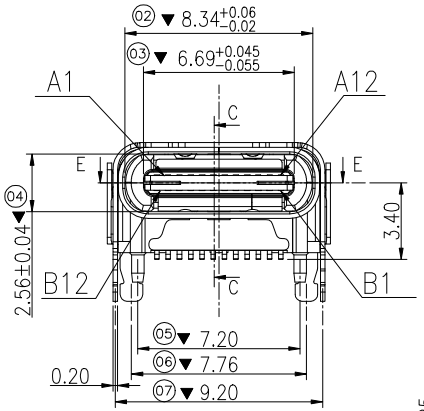

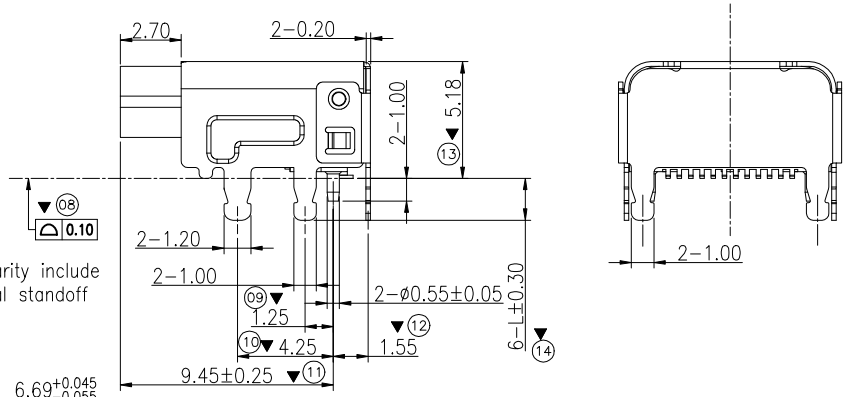

Co-planarity include the metal standoff

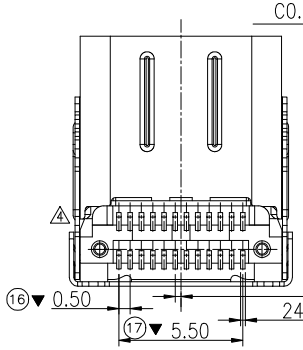

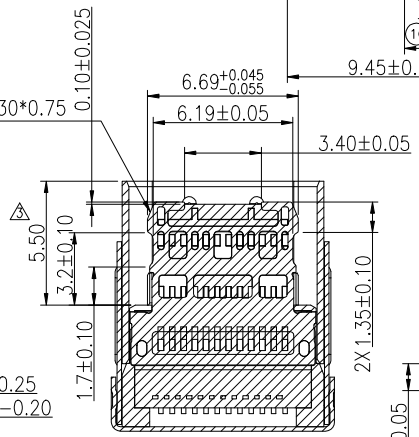

Scetion E-E

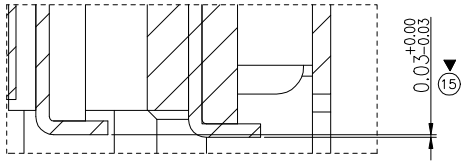

Detail D
Scale 4:1

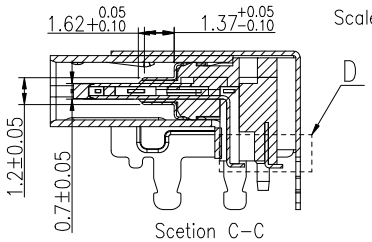

Scetion C-C

PINS ASSIGNMENTS

A12	A11	A10	A9	A8	A7	A6	A5	A4	A3	A2	A1
GND	SSRXp2	SSRXn2	Vbus	SBU1	Dn1	Dp1	CC1	Vbus	SSTXn1	SSTXp1	GND
GND	SSTXp2	SSTXn2	Vbus	CC2	Dp2	Dn2	SBU2	Vbus	SSRXn1	SSRXp1	GND
B1	B2	B3	B4	B5	B6	B7	B8	B9	B10	B11	B12

ITEM	PART P/N:	PART DESCRIPTION	
3.	319CFKJ96SNHF	USB C TYPE REC 2ROWS R/A 双排SMT L=11.10MM, CH=3.4MM/无法兰, 外壳 DIP=2.54MM LCP黑色 半金雾锡30u", 印D/C YWWD 无卤	8
2.	319CFKC76SNHF	USB C TYPE REC 2ROWS R/A 双排SMT L=11.10MM, CH=3.4MM/无法兰, 外壳DIP=3.60MM LCP黑色 半金雾锡30u", 印D/C YWWD 无卤	6
1.	319CFKC66SNHF	USB C TYPE REC 2ROWS R/A 双排SMT L=11.10MM, CH=3.4MM/无法兰, 外壳 DIP=1.85MM LCP黑色 接触区域镀金30u", SMT脚镀金gold flash, 印D/C YWWD 无卤	6

图号 (DWG NO)	G-319-S1-287	单位 (UNIT): MM	显赫电子科技有限公司 XianHe Electronic Technology co. ,ltd.
类别 (DWG TYPE)	SALES DWG	比例 (SCALE) 1:1	TEL:0769-89138899 FAX:0769-89100950
版次 (REV): A/8	页次 (PAGE): 1/1		
设计 (DESIGN)	Sunny	未注公差 TOLERANCE UNSPECIFIED: X.X ± 0.38; X.XX ± 0.20; X.XXX ± 0.10; X° ± 5°; X.X° ± 2°	品名 (ITEM NO) USB TYPE C REC 2 rows SMT HIGH RISE, CH=3.4mm/flangeless
审核 (CHECKED)			料号 (PART NO) Please see P/N information
核准 (APPROVED)			