RoHS Compliant

REV.	ECN NO	LTR	DESCRIPTION	REVISER	DATE
A/0			Initial release.	ZXW	2016.05.11

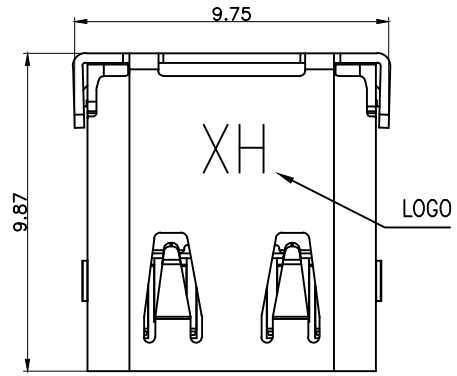

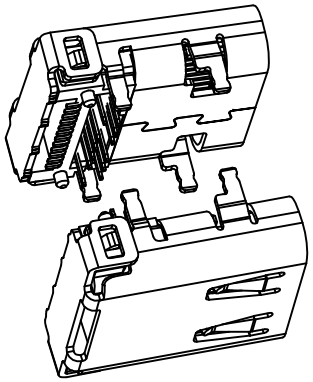

PIN	SIGNAL NAME	PIN	SIGNAL NAME
A1	GND	B12	GND
A2	SSTXP1	B11	SSRXP1
A3	SSTXN1	B10	SSRXN1
A4	VBUS	B9	VBUS
A5	CC1	B8	SBU2
A6	DP1	B7	DN2
A7	DN1	B6	DP2
A8	SBU1	B5	CC2
A9	VBUS	B4	VBUS
A10	SSRXN2	B3	SSTXN2
A11	SSRXP2	B2	SSTXP2
A12	GND	B1	GND

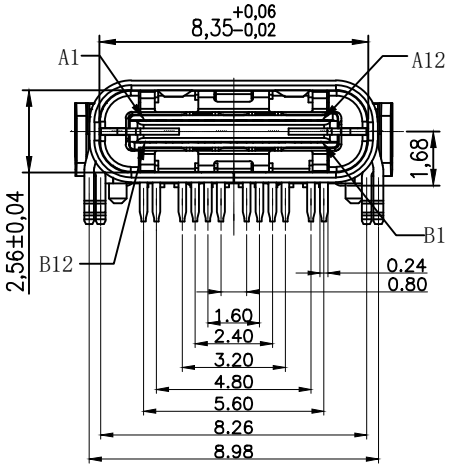

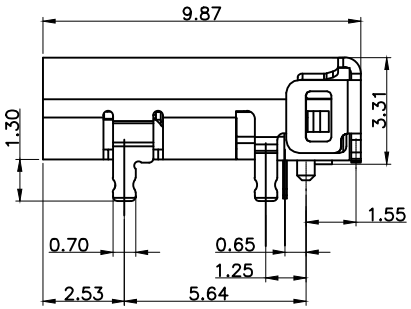

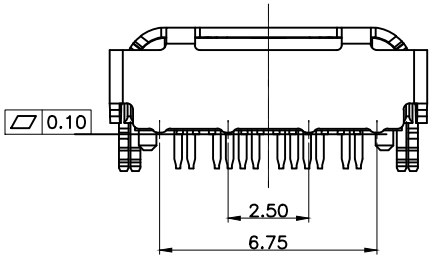

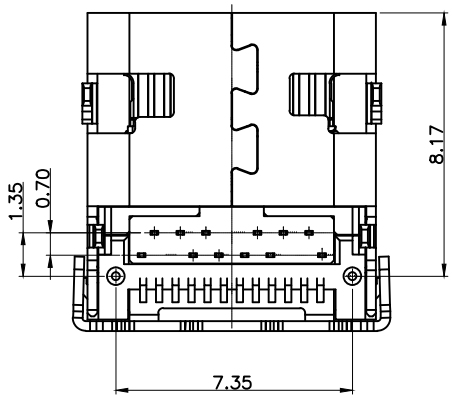

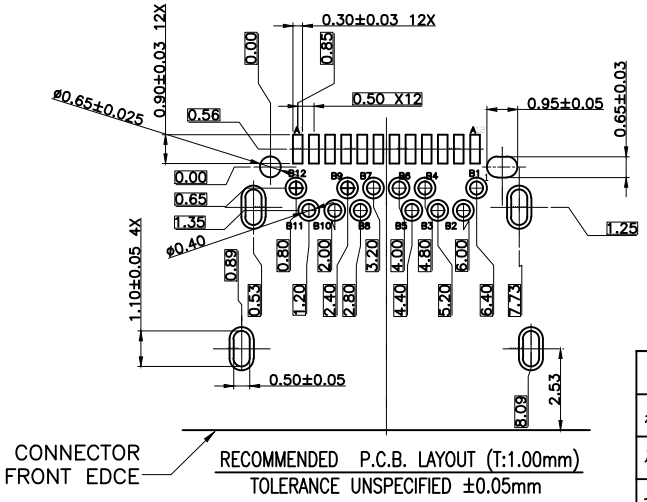

RECOMMENDED P.C.B. LAYOUT (T:1.00mm)
TOLERANCE UNSPECIFIED ±0.05mm

NOTES:

1. MATERIAL:
   HOUSING: HIGH TEMPERATURE THERMAL PLASTIC, LCP , UL94V-0, COLOR: BLACK
   TERMINAL: COPPER ALLOY, BRASS,
   MIDDLE PLATE: STAINLESS 304,
   SHELL: STAINLESS 304,
   INNER SHIELD PLATE: STAINLESS 304,
2. FINISH:
   TERMINAL:
   CONTACT AREA: SELECTIVE GOLD PLATING.
   SOLDERING AREA: MATTE TIN PLATING 100 u" THICKNESS MIN.;
   UNDER PLATING: NICKEL PLATING 50 u" THICKNESS MIN. OVERALL.
   SHELL:
   50 u" MIN NICKEL OVERALL
   MIDDLE PLATE:
   50 u" MIN NICKEL OVERALL
3. ELECTRICAL CHARACTERISTICS;
   CONTACT RESISTANCE: 40mΩ Max FOR INITIAL. 10mΩ CHANGE AFTER TEST.
   MEASURE AT 20mV, 100mA.
   CONTACT CURRENT RATING: 5A FOR VBUS PIN; 1.25A FOR VCONN PIN.
   DIELECTRIC WITHSTANDING VOLTAGE: 100V AC R.M.S.
   INSULATION RESISTANCE 100MΩ Min
   OPERATING TEMPERATURE: -40°C ~ 85°C
4. MECHANICAL CHARACTERISTICS:
   MATING FORCE: 5~20 N.
   UNMATED FORCE: 8~20N AFTER TEST
   DURABILITY: 10,000 CYCLES

PART NUMBER INFORMATION

319CFK-A2-X-SN

REV.

Terminal plating:

1: Gold Au 1u" on contact area.

4: Gold Au 15u" on contact area.

6: Gold Au 30u" on contact area.

图号 (DWG NO)	G-319-S1-11	单位 (UNIT): MM	
模号 (MODEL NO)		比例 (SCALE) 1:1	
版次 (REV): A/0	页次 (PAGE): 1/1		
设计 (DESIGN)	ZXW	未注公差 TOLERANCE UNSPECIFIED: X.X ± 0.38; X.XX ± 0.20; X.XXX ± 0.10; X° ± 5°; X.X° ± 2°	
审核 (CHECKED)			
核准 (APPROVED)			

显赫电子科技有限公司
XianHe Electronic Technology co. ,ltd.
TEL:0769-89138899 FAX:0769-89100950

品名 (ITEM NO)	USB C TYPE 母座R/A DIP+SMT Hybrid L=9.87mm黑色半金锡 环保
料号 (PART NO)	Please see P/N information